SUN™

LP60-030 PTC RESETTABLE OVERCURRENT PROTECTOR

APPLICATION:

Almost anywhere there is a low voltage power supply and a load to be protected including:

- **DC MOTOR DRIVE CIRCUIT**
- **COMPUTERS & PERIPHERALS**
- **GENERAL ELECTRONICS EQUIPMENT**
- **AUTOMOTIVE APPLICATION**

ELECTRICAL CHARACTERISTICS:

I_{max} 40A

V_{max} 60VOLTS

I_{hold} ..... 0.3A max @ 23°C

I_{trip} ..... 0.6A min @ 23°C

RESISTANCE

$R_{initial}$ ..... 0.76 OHM MIN
1.36 OHM MAX

Time to trip ..... 3.0 SEC

P_D 0.49W

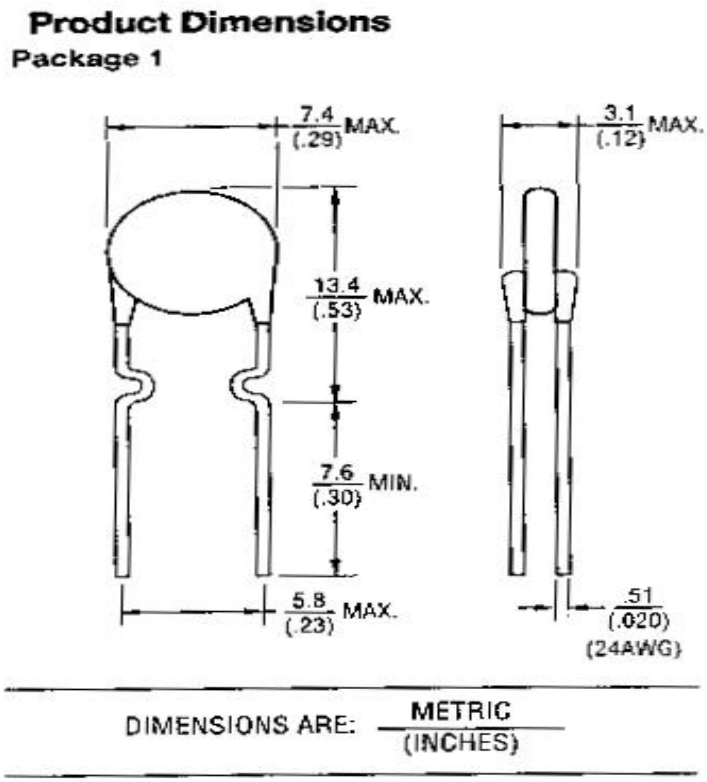

- **DIRECT REPLACE: BOURNS MF-R030**
  : RAYCHEM RXE030

NOTE: **Measured Values**

I_H – Hold current	Maximum current device will pass without interruption in 23°C still air.
I_T – Trip current	Min. current which will switch the device from low to high resistance in 23°C still air.
I_{max}	Maximum fault current the device can withstand without damage at rated voltage.
V_{max}	Maximum voltage the device can withstand without damage at rated current.
P_D	Power dissipated from the device when in the tripped state in 23°C still air.
Initial Resistance	Device resistance as received from the factory.

MOBICON GROUP