HB100 Microwave Motion Sensor 10.525GHz Doppler Radar Detect

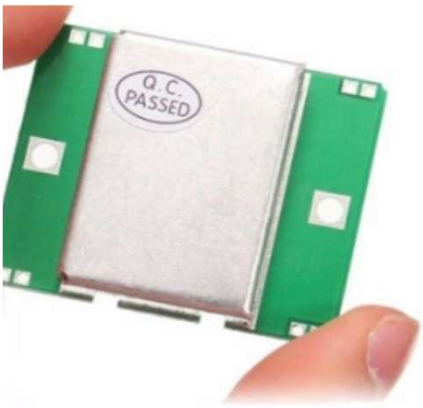

Description:

HB Series of microwave motion sensor module are X-Band Mono-static DRO Doppler transceiver front-end module. These modules are designed for movement detection, like intruder alarms, occupancy modules and other innovative ideas. The module consists of Dielectric Resonator Oscillator (DRO), microwave mixer and patch antenna.

The module should be mounted with the antenna patches facing to the desired detection zone. The user may vary the orientation of the module to get the best coverage.

Spec:

Low current consumption
CW or Pulse operation
Flat profile
Long detection range
X-Band Frequency 10.5 GHz
Operating Voltage 4.5V to 5.2V
DC level (0.01 to 0.2 Vdc)
Fd= 19.49V (Velocity in km/hour) or 31.36V (V in mile per hour)
Fd=> Doppler frequency (If a target is moving straight toward or away from HB100 (Ft = 10.525 GHz))
Size: 46x36x7mm

Interfacing HB100 with Arduino:

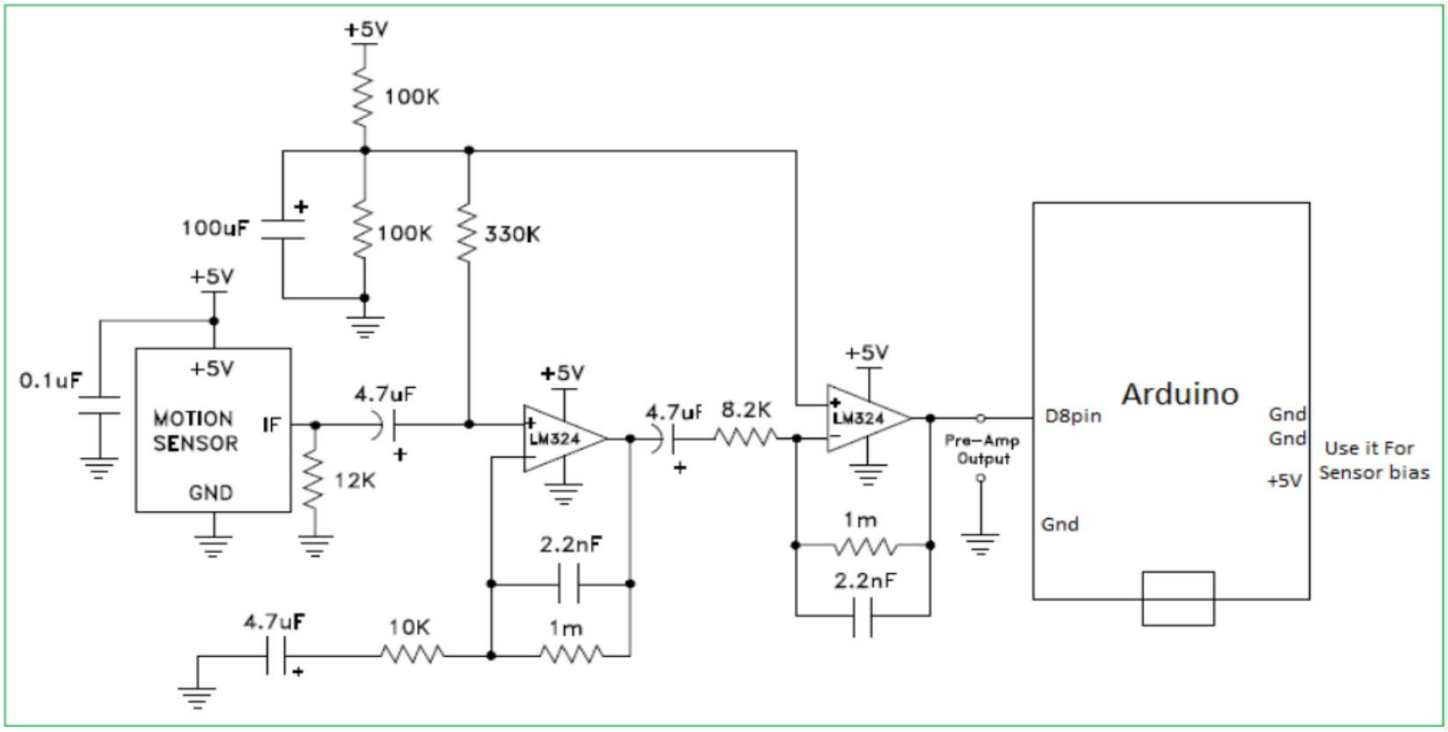

Resources:

Datasheet: http://www.mantech.co.za/Datasheets/Products/MSAN-001_AGILSENSE.pdf
Interfacing With Arduino: http://www.theorycircuit.com/hb100-microwave-motion-sensor-interfacing-arduino/
Tutorial Video: https://www.youtube.com/watch?v=PpU7R5LMUs4