RoHS
COMPLIANCE

Feature

1. Insulated shaft style
2. Carbon element
3. Wide range of resistance tapers

F-162k Series insulated shaft rotary potentiometer

Electrical characteristics

- Total Resistance.....Single Unit: 500Ω~1 MΩ,Dual Unit: 2kΩ~ 500kΩ
- Total Resistance Tolerance..... ± 20%
- Resistance Taper.....A,B,C,D
- Rated Voltage.....Linear Taper B:AC 200V Other Tapers : AC 150V
  Dual Unit: AC 50V, DC 20V
- Rated Power.....Linear Taper B : 0.125W,Other Tapers :0.06W
  Dual Unit; 0.06W
- Sliding Noise.....Less than 100mv
- Insulation Resistance.....More than 100MΩ at DC 250V
- Withstand voltage.....1 minute at AC 250V
- Residual Resistance..... Term.1~2:Less than 20Ω
  Term. 2~3:Less than 20Ω
- Gang Error(Dual Unit).....-40dB~0dB ± 3dB

Mechanical characteristics

- Total Rotational Angle.....300° ± 5°
- Rotational Torque.....10gf.cm~100gf.cm
- Click Torque.....50gf.cm~250gf.cm
- Rotational Stopper Strength.....6.0kgf.cm Min.
- Push-Pull Strength.....8.0kgf Min

Durability

- Rotational Life.....10,000 Cycles

F-162K Series

Snap-In Insulated Shaft Rotary Potentiometer

F-162KP-10

Vertical Type, Single Unit, Solder Terminal With Center Click

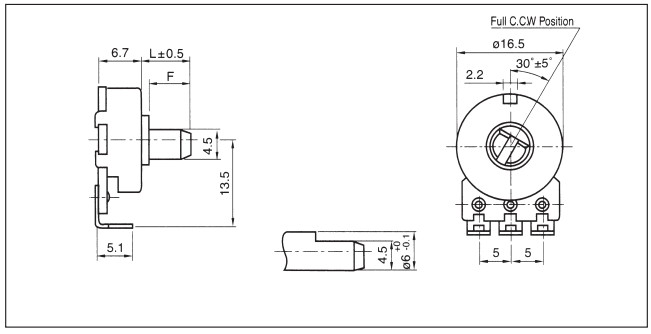

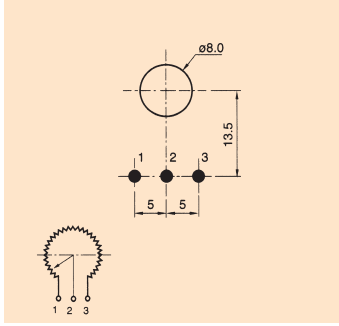

F-162KP-4

Horizontal Type, Single Unit, P.C.B.Terminal With Center Click

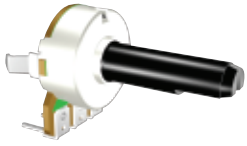

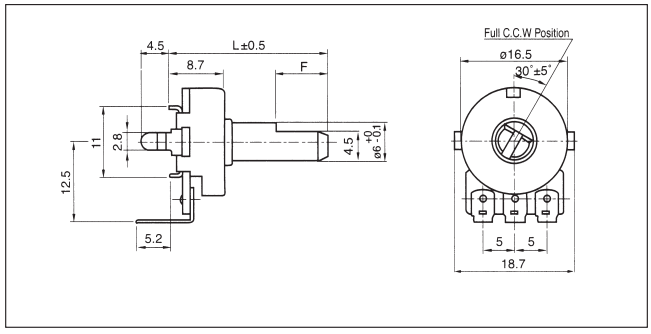

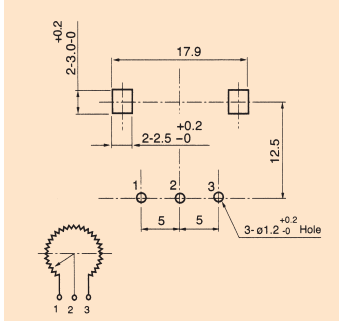

F-162KP-16LS

Horizontal Type, Single Unit, P.C.B. Terminal

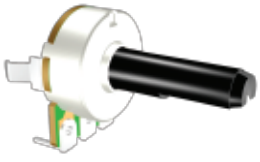

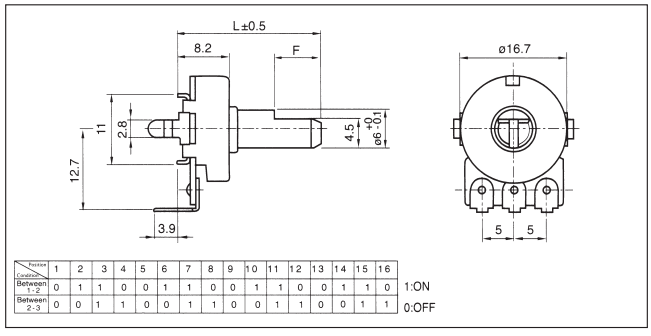

Position / Condition	1	2	3	4	5	6	7	8	9	10	11	12	13	14	15	16	
Between 1-2	0	1	1	0	0	1	1	0	0	1	1	0	0	1	1	0	1:ON
Between 2-3	0	0	1	1	0	0	1	1	0	0	1	1	0	0	1	1	0:OFF

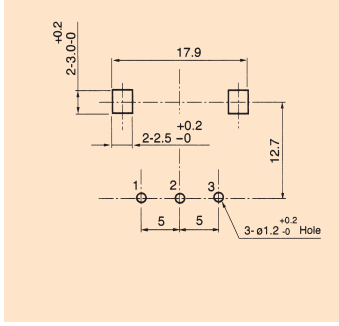

F-162KP-1-16LS

Horizontal Type, Single Unit, P.C.B. Terminal

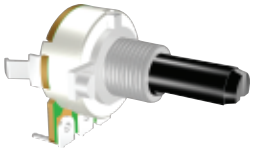

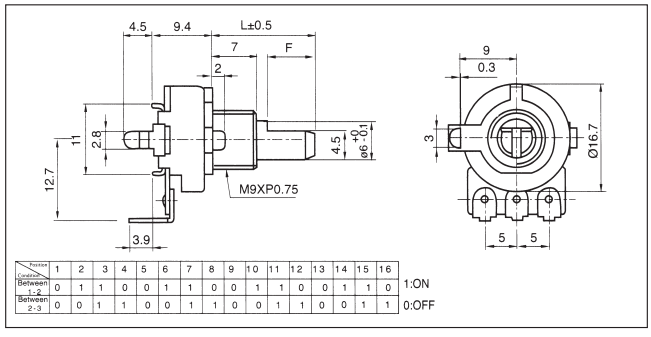

Position / Condition	1	2	3	4	5	6	7	8	9	10	11	12	13	14	15	16	
Between 1-2	0	1	1	0	0	1	1	0	0	1	1	0	0	1	1	0	1:ON
Between 2-3	0	0	1	1	0	0	1	1	0	0	1	1	0	0	1	1	0:OFF

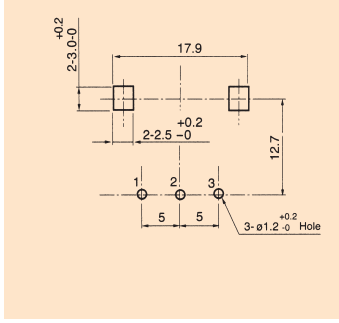

F-162K Series

Snap-In Insulated Shaft Rotary Potentiometer

F-162K

Vertical Type, Single Unit,
P.C.B.Terminal With Center Click

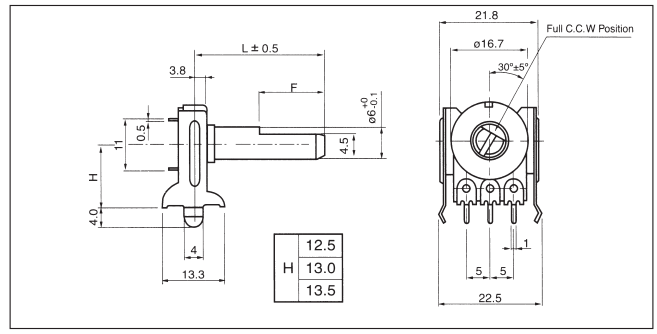

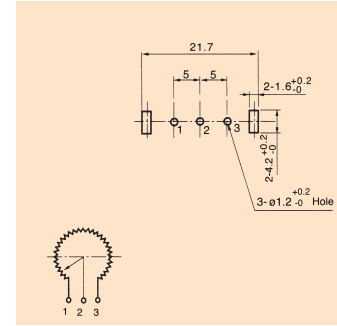

F-162K-1

Vertical Type, Single Unit,
P.C.B.Terminal With Center Click

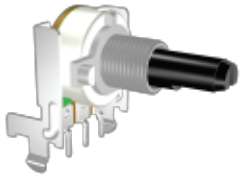

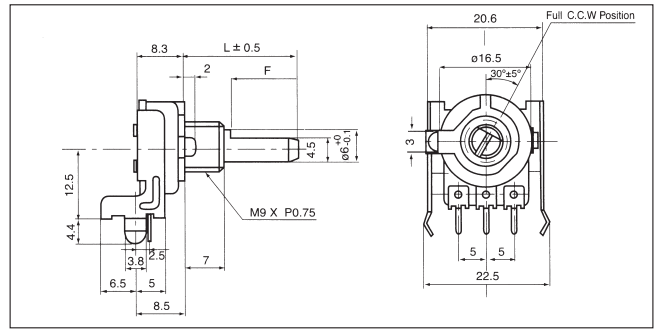

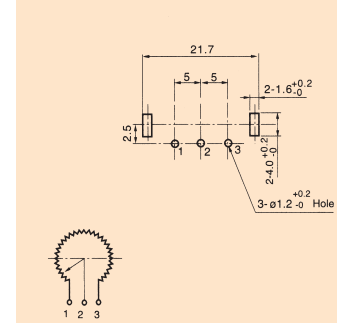

F-162KP

Horizontal Type, Single Unit,
P.C.B.Terminal With Center Click

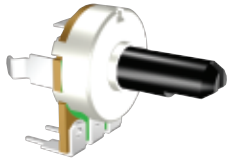

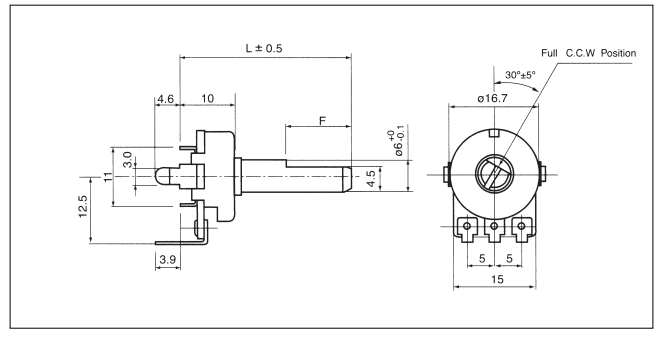

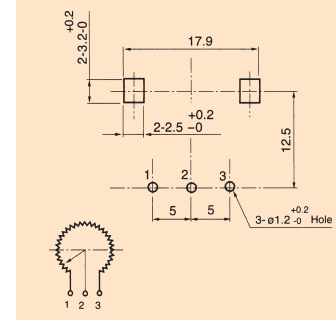

F-162KP-1

Horizontal Type, Single Unit,
P.C.B. Terminal With Center Click

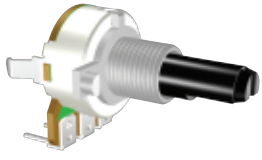

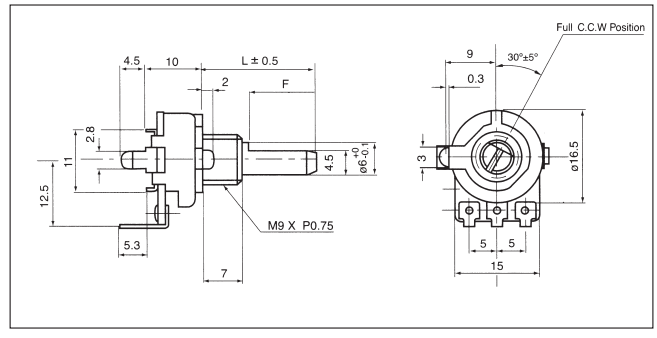

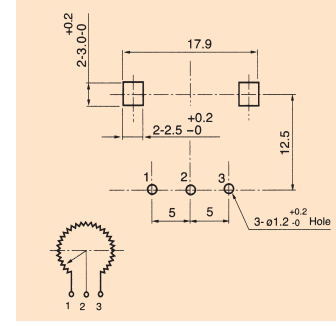

Part number system of insulated shaft potentiometer

F- 16 2K P B 50K L20 F *12 (O)

- (O) — Code of lube
- *12 — Section length of shaft
- F — Style of shaft
- L20 — Length of shaft
- 50K — Total resistance
- B — Resistance taper
- P — Style of terminal
- 2K — Number of flowing
- 16 — Outline dimension 16=16mm
- F- — Favor union