RoHS
COMPLIANCE

Feature

- Low-profile
- Center detent option
- Carbon element

F-slim slide potentiometer

Electrical characteristics

- Total Resistance.....500Ω ~1MΩ
- Total Resistance Tolerance..... ± 20%
- Resistance Taper.....A, B,C,D
- Withstand Voltage..... 1 minute at AC 250v
- Insulated Resistance..... More than 10MΩ at DC 250V
- Sliding Noise..... Less than 100 mv at 20 mm/sec.
- Residual Resistance..... Term.1~2:Less than 10Ω
  Term.2~3:Less than 10Ω
- Gang Error(Dual Unit).....-40dB~0dB ± 3dB
- Rated Voltage Linear Taper B..... 10mm,15mm: AC 100V
  20mm,25mm: AC 200V
  30mm, AC 250V
  Other Tapers.....10mm,15mm: AC 50V
  20mm,25mm: AC 150V
  30MM: AC 200V
- Rated Power(Single Unit/Dual Unit)
  Linear Taper B..... 10mm,15mm: 0.05W/0.025W
  20mm,25mm: 0.1W/0.05W
  30mm:0.2W/0.1W
  Other Tapers..... 10mm,15mm: 0.025W/0.012W
  20mm,25mm: 0.05W/0.025W
  30mm:0.1W/0.05W

Mechanical characteristics

- Operating Force..... 5gf ~ 80gf
- Stopper Strength.....3.0 kgf.cm Min
  (from the base level to a point of 2 mm)
- Center Detent Force..... ..... 20gf~150gf
- Level Wobble.....2(2xL)/20 mm Max.(L:Level length both sides)
- Level Push-Pull Strength.....3.0kgf Min.at 5 sec.

Durability

- Rotational Life..... 10,000 Cycles Min.

Shaft illustration

Standard Dimensions of Shaft for SLIM Series.
(Customer designs are welcomed)

MODEL	102J 202J 102G 102GP 103NP 203NP 202G 202GP 205N 205NP			
	C TYPE		I TYPE	H TYPE
DIMENSIONS	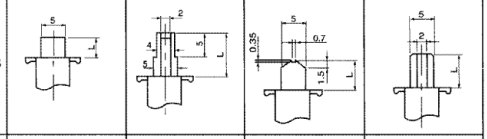			
L	3C 4C	9.5C	6 I	7H

MODEL	102N 202N 302N	
DIMENSIONS	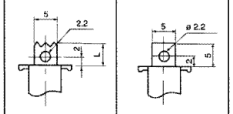	
L	5A	5B

MODEL	107 157 207 307 SERIES								
	C TYPE					D TYPE			GC TYPE
DIMENSIONS	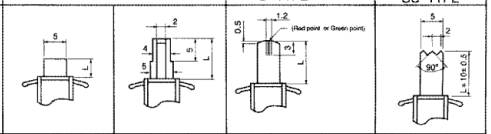								
L	4C	5.5C	8.5C	12C	15C	8.5D 15D	10D 17D	12D 20D	10GC

SLIM Series

Slide Potentiometer

F-102J

10mm, Lie Type, Single Unit

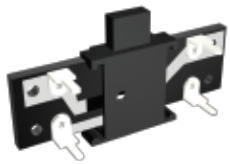

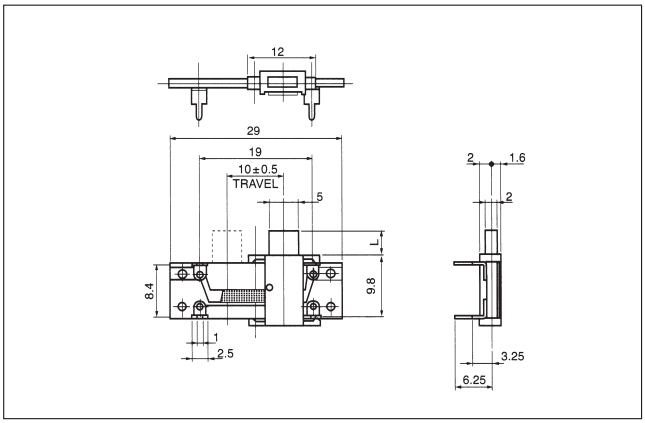

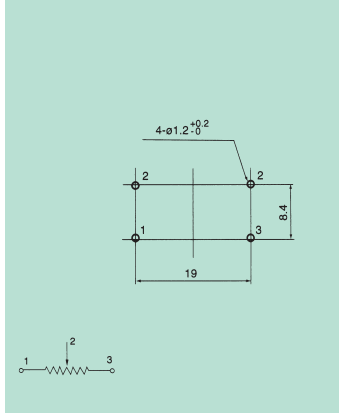

F-102N

10mm, Stand Type, Single Unit

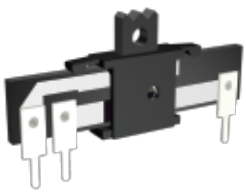

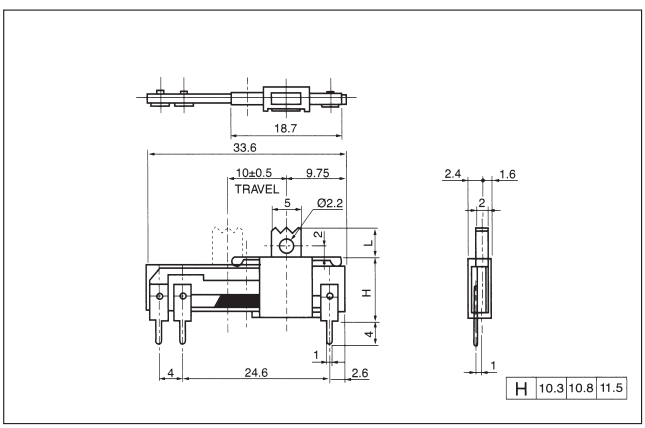

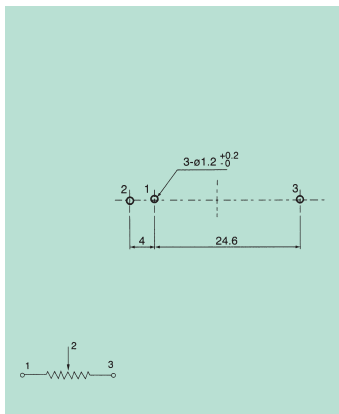

F-102GP

10mm, Lie Type, Dual Unit

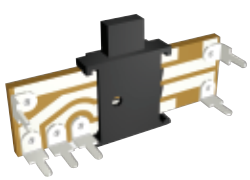

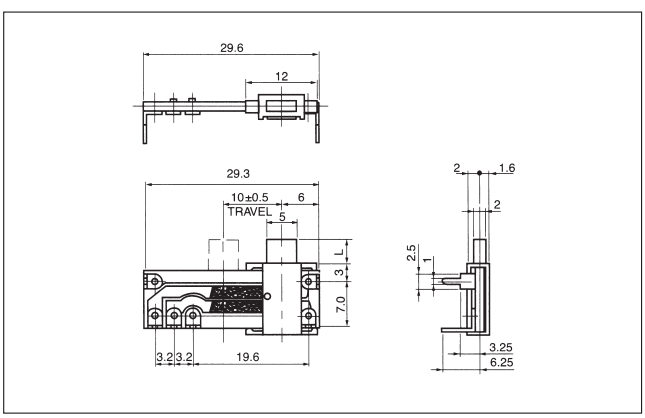

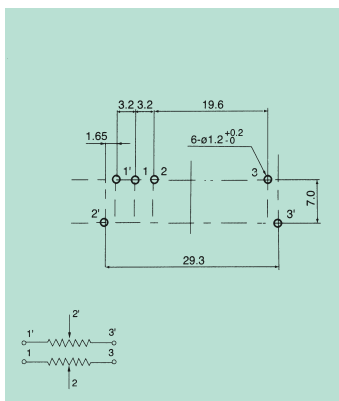

F-103NP

10mm, Lie Type, Single Unit

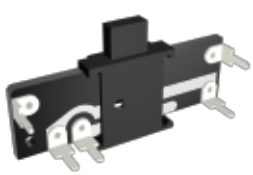

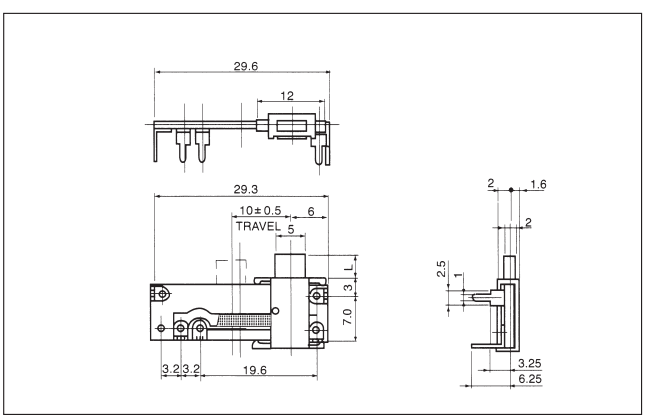

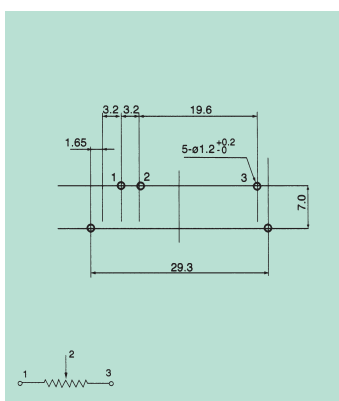

SLIM Series

Slide Potentiometer

F-202GP

20mm, Lie Type, Dual Unit

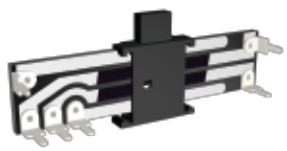

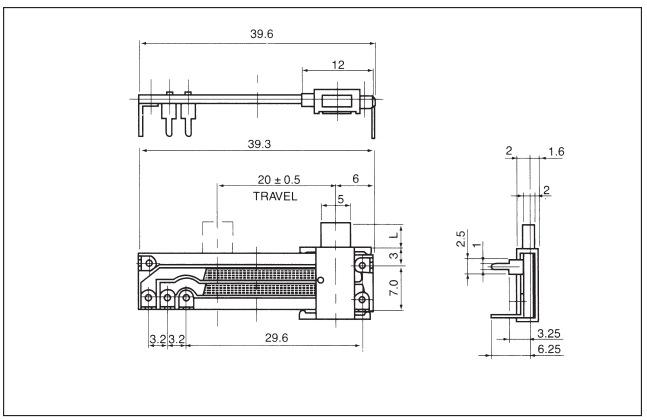

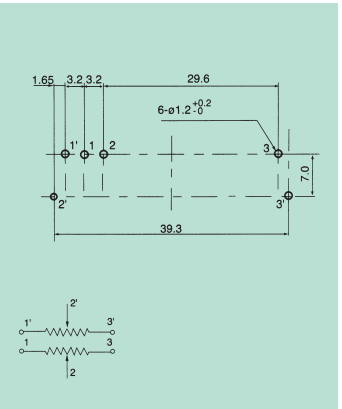

F-202N

20mm, Stand Type, Single Unit

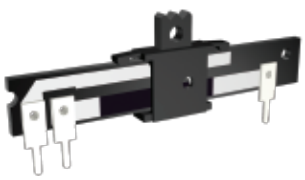

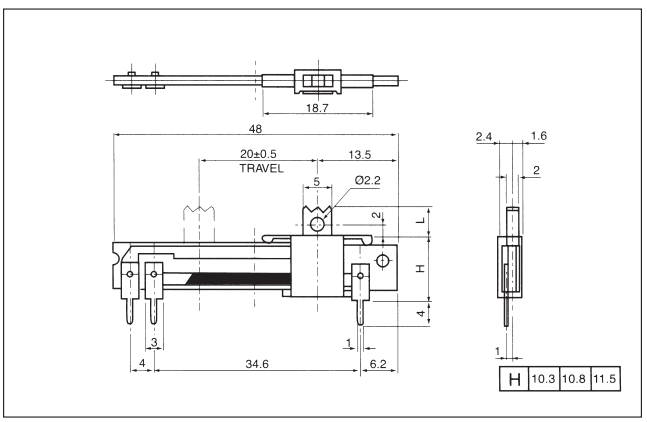

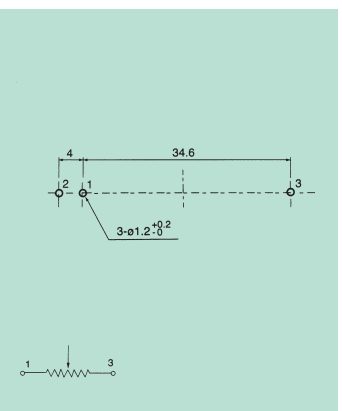

F-302N

30mm, Stand Type, Single Unit

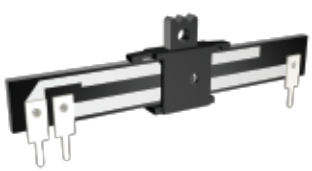

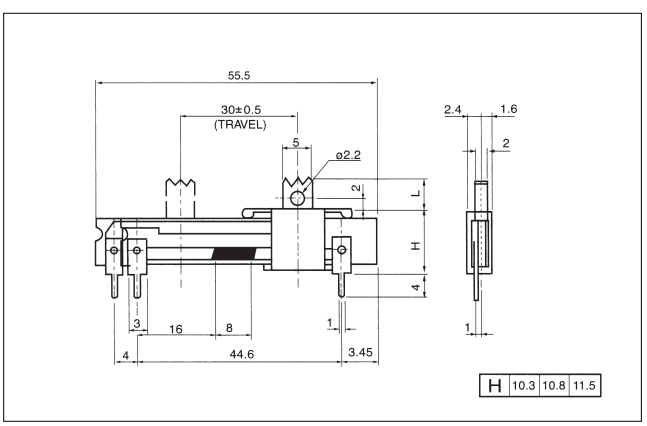

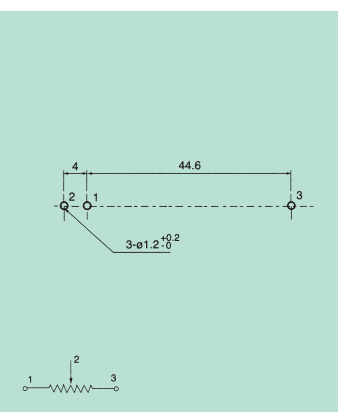

F-205N

20mm, Stand Type, Single Unit

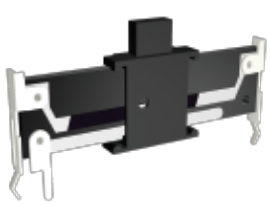

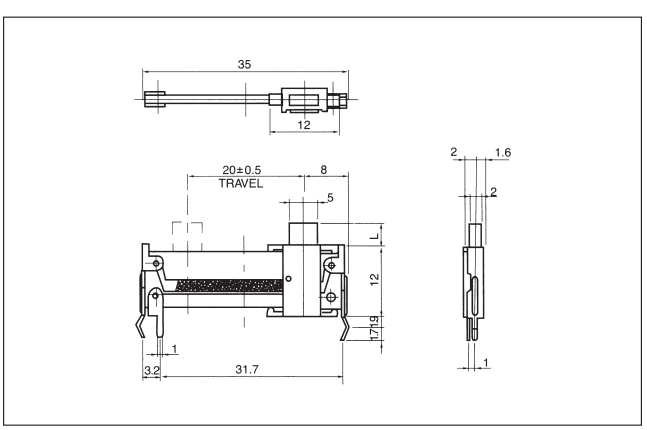

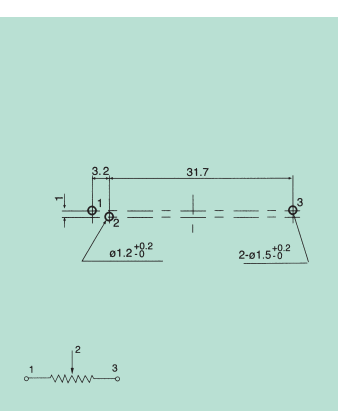

SLIM Series

Slide Potentiometer

F-1572

15mm, Stand Type, Dual Unit,
Center Detent and Tap available

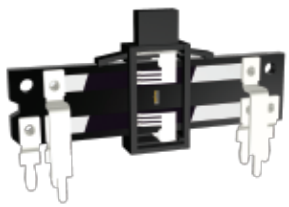

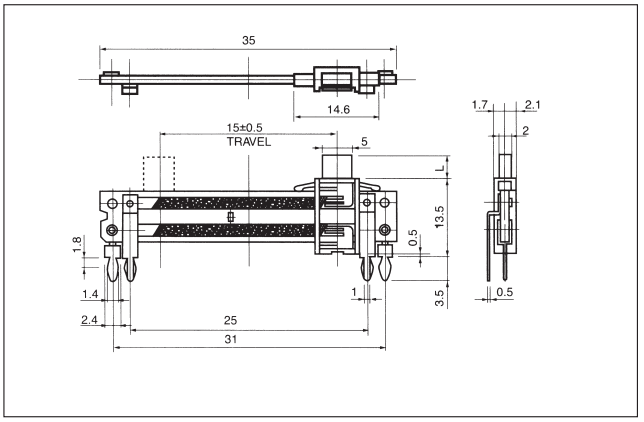

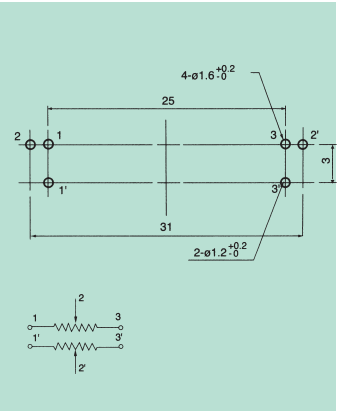

F-2071

20mm, Stand Type, Single Unit,
Center Detent and Tap available

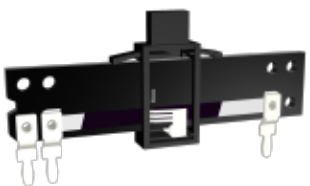

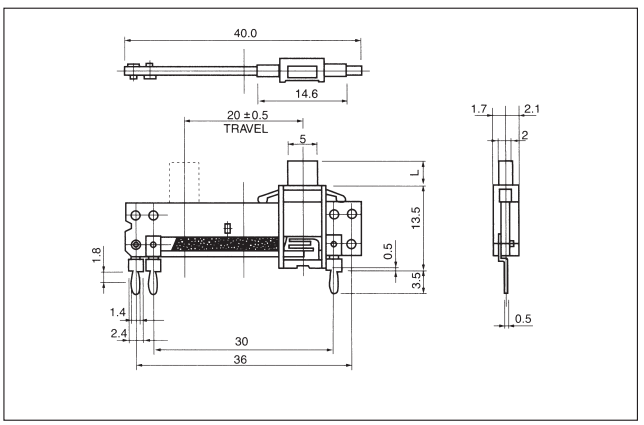

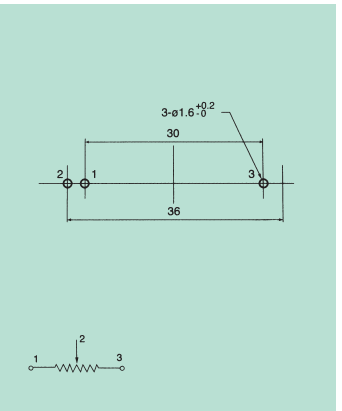

F-2072

20mm, Stand Type, Dual Unit,
Center Detent and Tap available

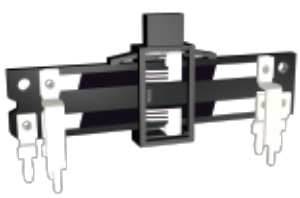

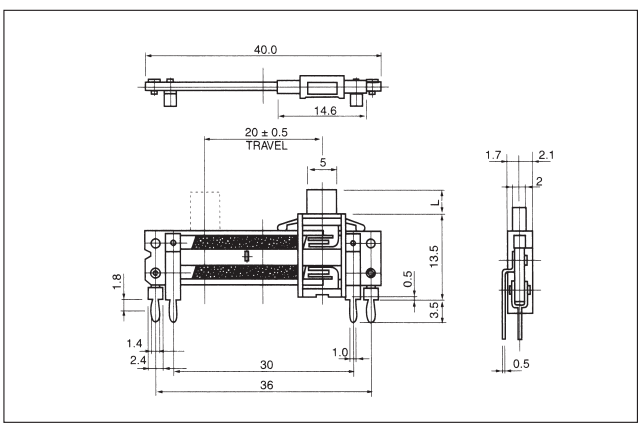

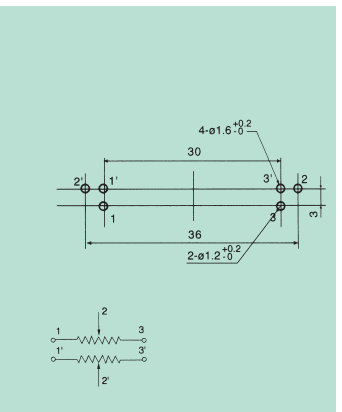

F-3071

30mm, Stand Type, Single Unit,
Center Detent and Tap available

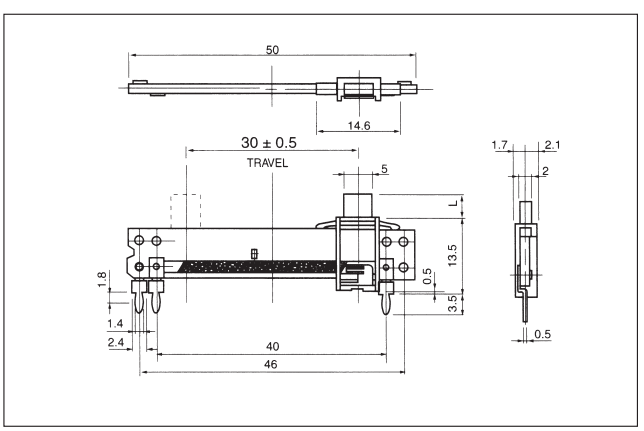

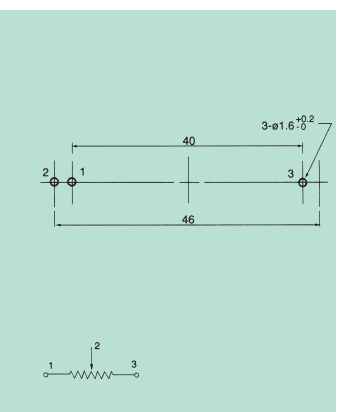

SLIM Series

Slide Potentiometer

F-3072

30mm, Stand Type, Dual Unit,
Center Detent and Tap available

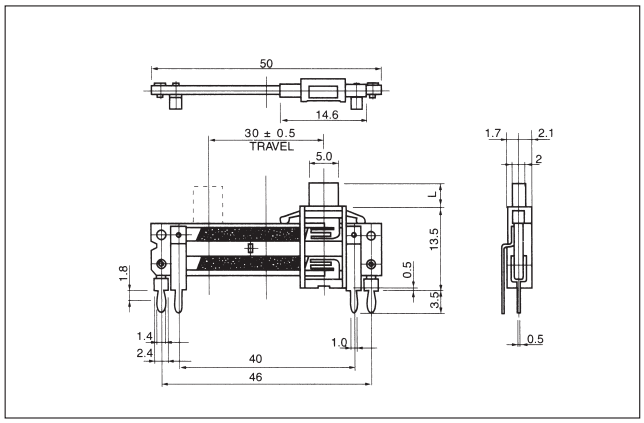

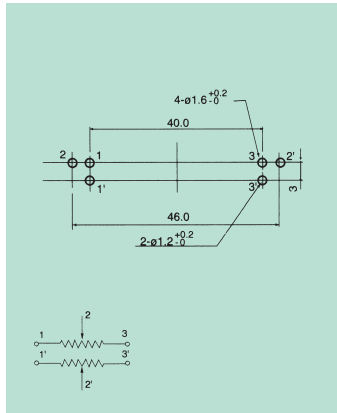

F-3071-1

30mm, Stand Type, Single Unit,
Center Detent and Tap available

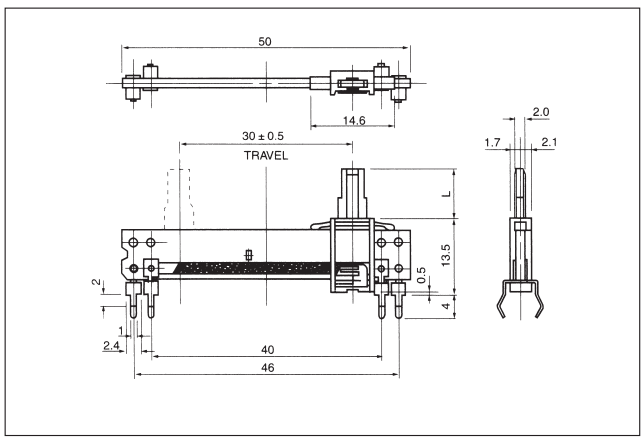

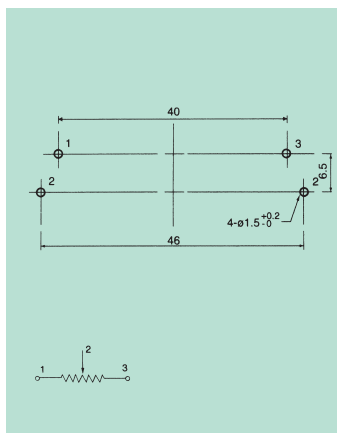

F-2071H0

20mm, Lie Type, Single Unit,
Center Detent and Tap available

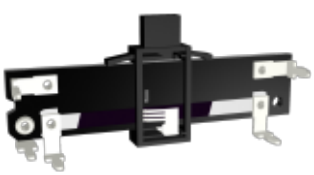

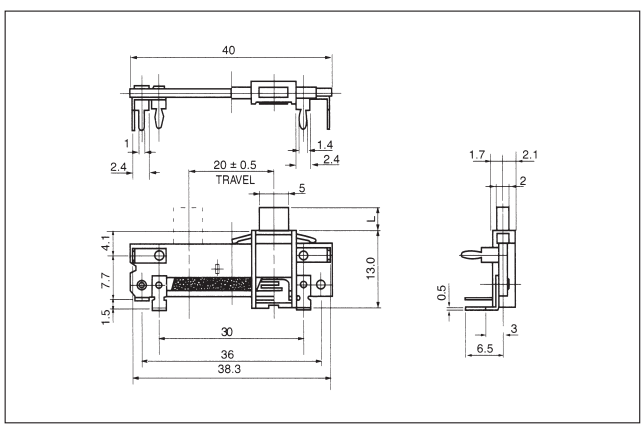

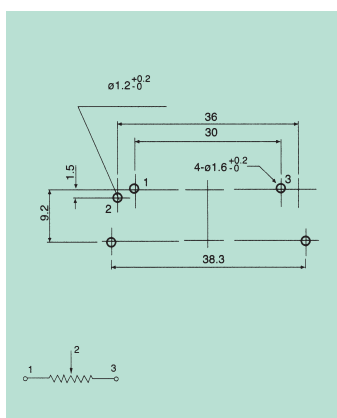

F-2071H2

20mm, Lie Type, Single Unit,
Center Detent available

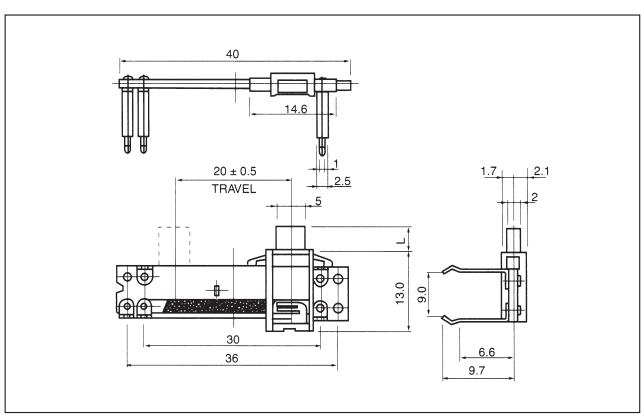

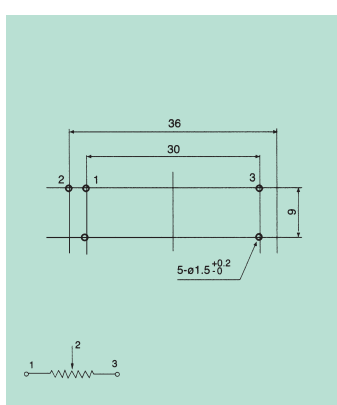

SLIM Series

Slide Potentiometer

F-205NP

20mm, Lie Type, Single Unit

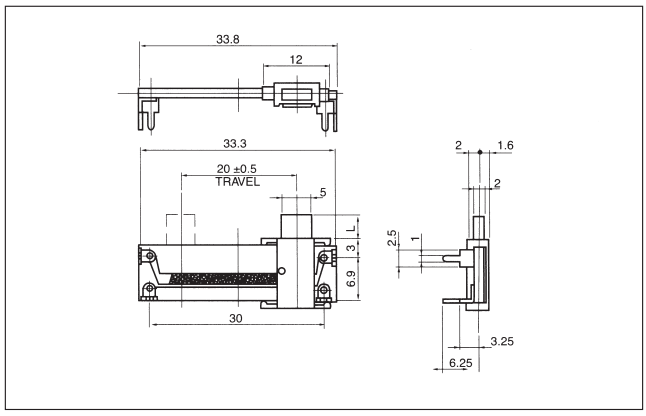

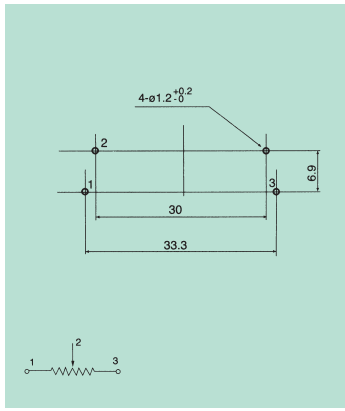

F-1071

10mm, Stand Type, Single Unit,
Center Detent and Tap available

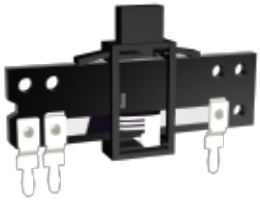

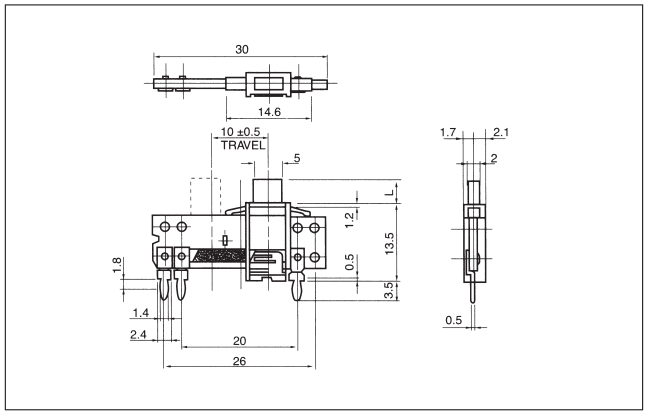

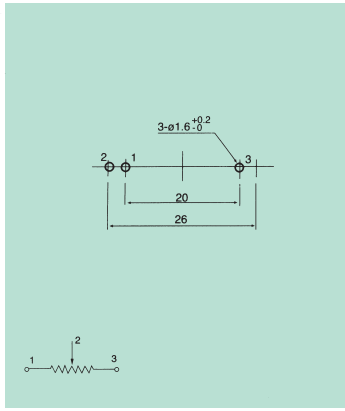

F-1072

10mm, Stand Type, Dual Unit,
Center Detent and Tap available

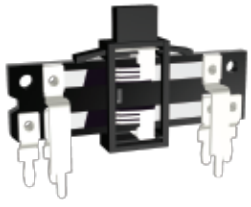

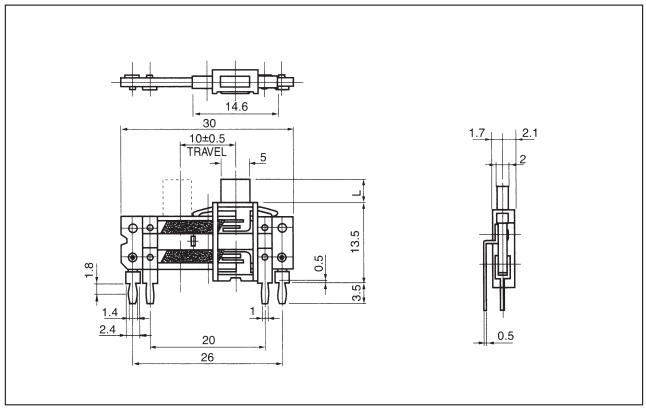

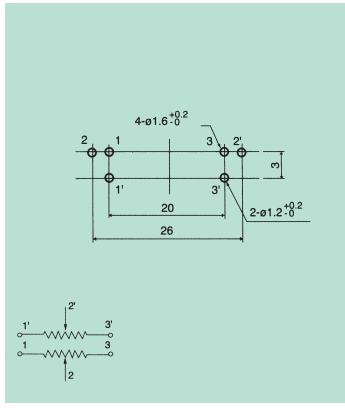

F-1571

15mm, Stand Type, Single Unit,
Center Detent and Tap available

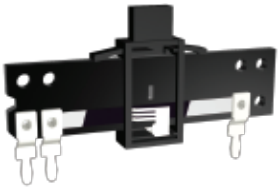

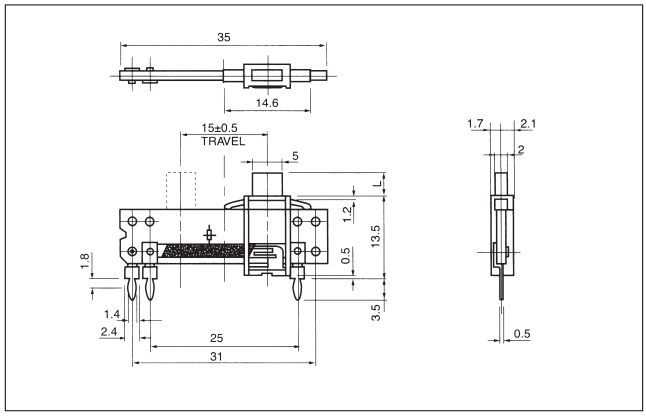

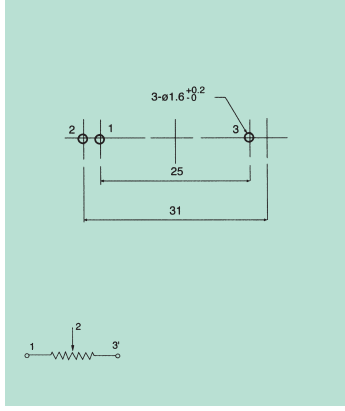

SLIM Series

Slide Potentiometer

F-2072H0

20mm, Lie Type, Dual Unit,
Center Detent and Tap available

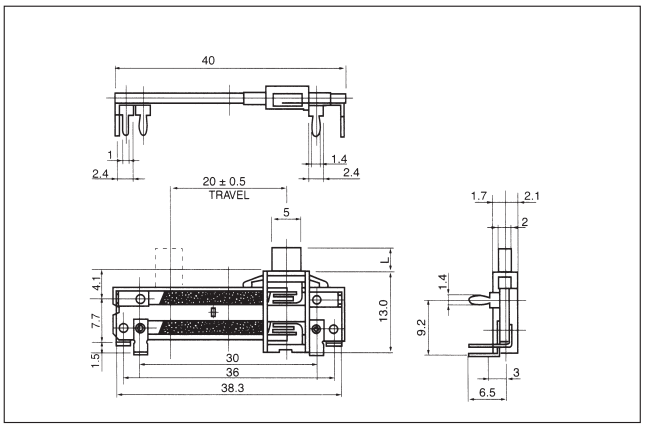

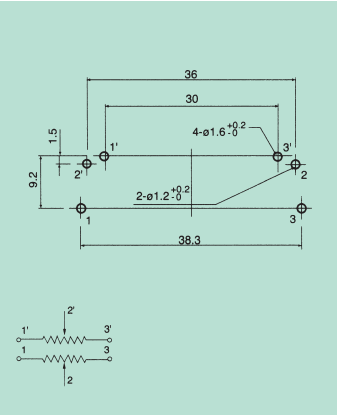

F-1572H1

15mm, Lie Type, Dual Unit,
Center Detent and Tap available

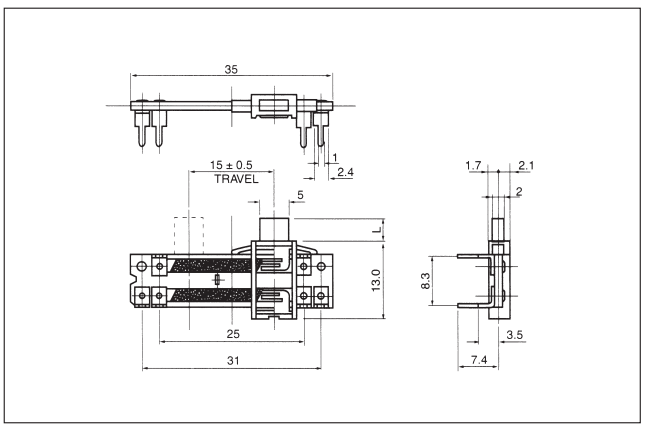

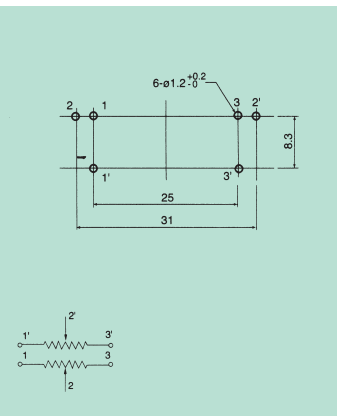

Part number system of slide potentiometer

F- 10 72 B 10K L4C

- L4C — Length&Tape of slide base
- 10K — Total resistance
- B — Resistance taper
- 72 — Type of product
- 10 — Slide travel(mm)
- F- — Favor union