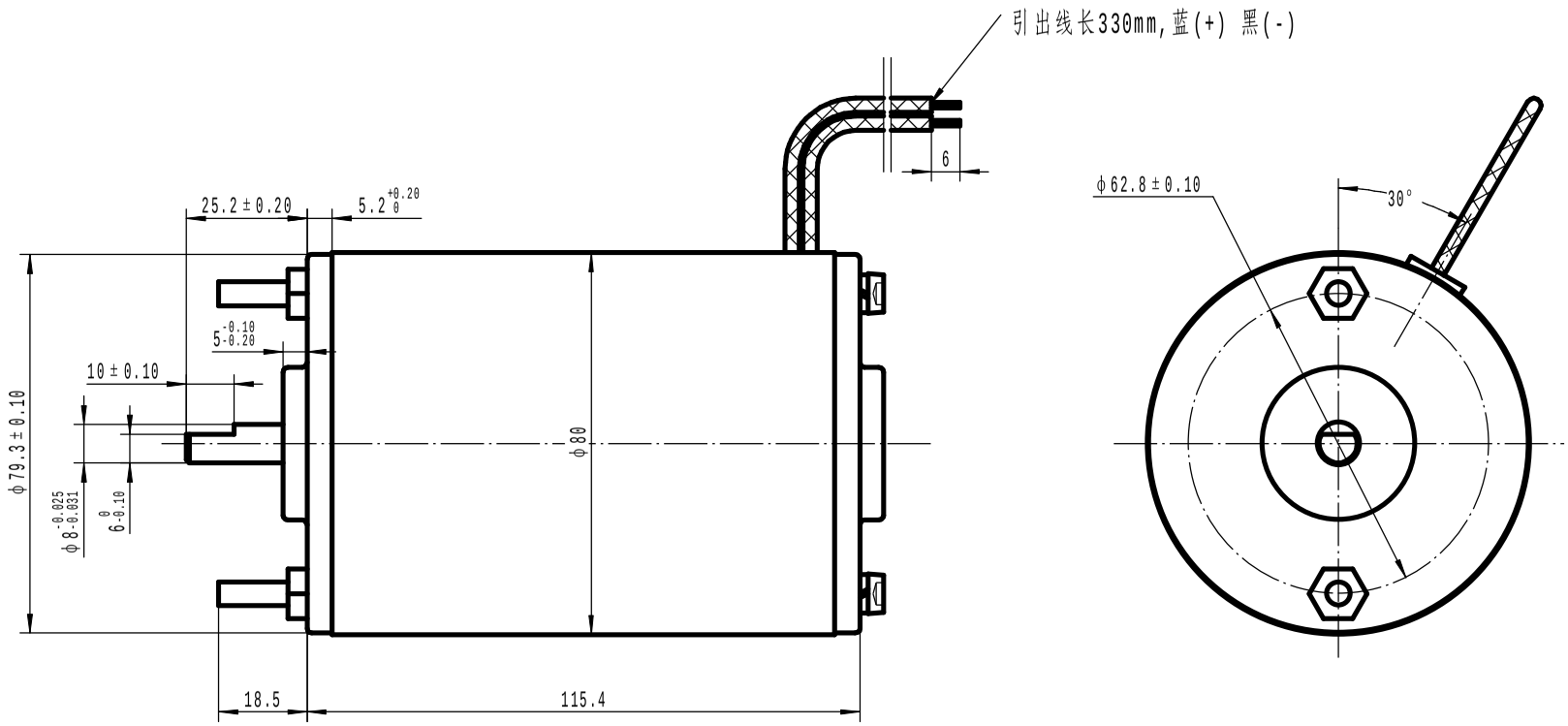

SPECIFICATION:

VOLTAGE:12.0VDC

NO LOAD SPEED:3400±50r/min

NO LOAD CURRENT:≤1.2A

RATED SPEED:≥2890r/min

RATED TORQUE:0.14N.m

RATED CURRENT:≤5.5A

								DONGZHENG MOTOR
REV.	QTY.	No.	SIG.		DATE			80zy115-1234G0825
DESIGN	陆干江	090731	STD.			CLS.MAK	QTY	SCALE
								D5 MOTOR OUTLINE
CHECK						S		1:1
PROC.			APPR.			PAGE OF		REV