Tel: (909)596-6298
Fax: (888)HO-CHIEN

HO CHIEN ELECTRONIC GROUP, INC.

COMPONENT PROFESSIONALS

2005 Series
0.156" Center Header; Friction Lock Right Angle

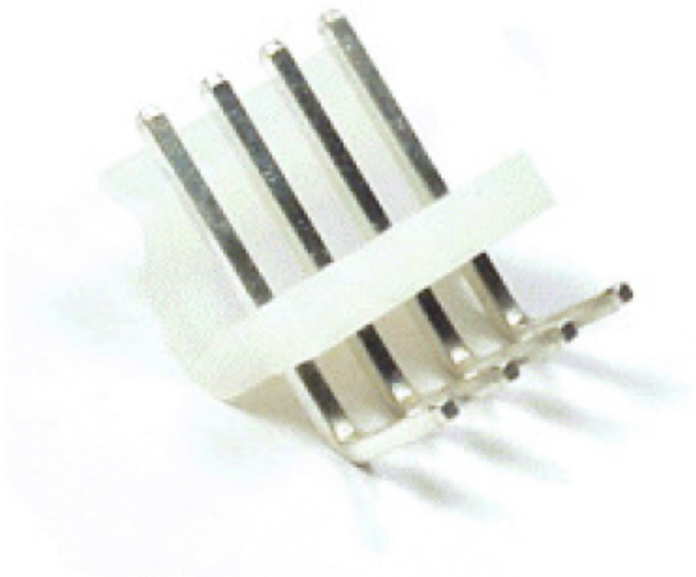

Material:
Contact: Brass
Contact Plating: 0.000150" Tin over 0.000100" Nickel Underplating
Insulator: Nylon 66; rated UL94V-O
Mating Connector: 2006 Series

Electrical:
Current Rating: 5 Amp Max.
Contact Resistance: 20 Milliohms. Max.
Insulation Resistance: 500 Megohms Min. DC 500V
Dielectric Strength: 1500V AC
Operation Temperature: -40°C to +105°C

RoHS Compliant
Pb
lead-free

Ordering Part Number

2005 -	[][]
Series Number	Number of Positions
	[1 thru 20 pins]

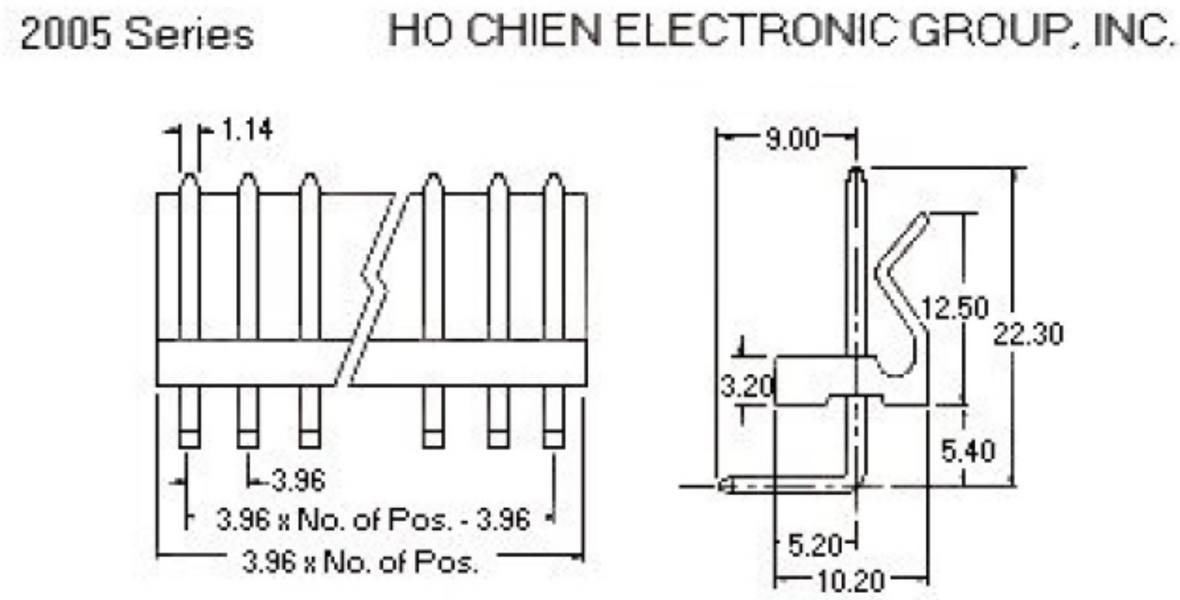

This drawing is a controlled document of Ho Chien Electronic Group, Inc. It is subjected to change.
Copyright @ 1997 Ho Chien Electronic Group, Inc. All rights reserved.

Copyright @ 1995-2012 Ho Chien Electronic Group, Inc. All rights reserved.