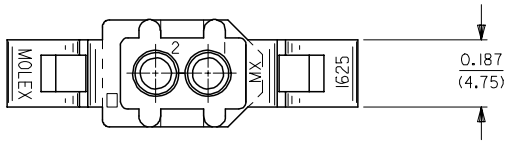

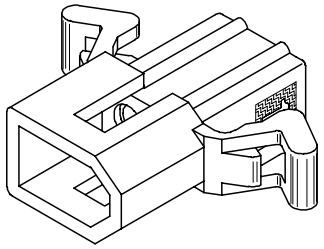

PLUG HOUSING

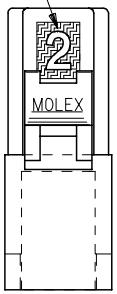

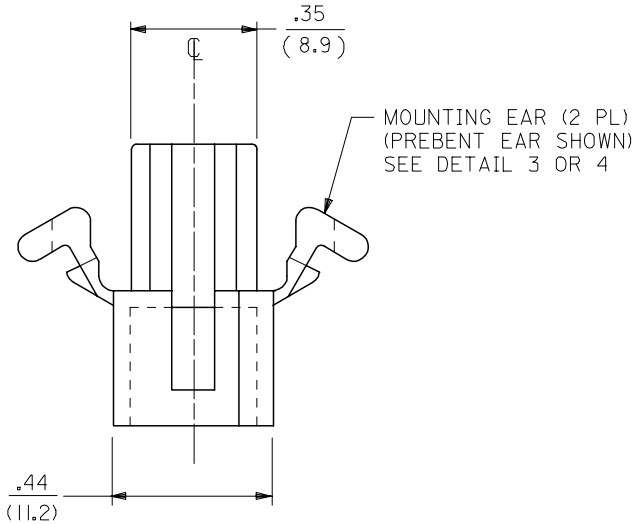

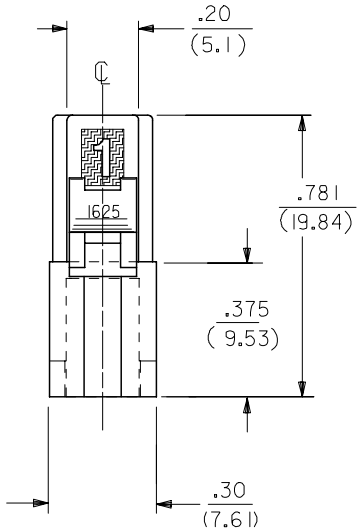

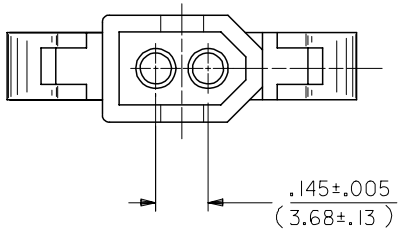

SHT.	REV.
3	AE1
2	AE1
1	AE1

ADD NEW TOOL STEP
EC NO: UCP2007-1980 2007/04/13
DRWN:PRIDDER 2007/04/16
CHKD:AELHAG 2007/04/19
APPR:FSMITH
DESCRIPTION
REV
AE1

QUALITY SYMBOLS
▼=0
(C)=0

GENERAL TOLERANCES (UNLESS SPECIFIED)

	mm	INCH
4 PLACES	± ---	± ---
3 PLACES	± ---	± .007
2 PLACES	± 0.18	± .010
1 PLACE	± 0.25	± ---
ANGULAR ± 1 °		

DRAFT WHERE APPLICABLE MUST REMAIN WITHIN DIMENSIONS

DIMENSION STYLE: IN/MM
SCALE: 4:1
DESIGN UNITS: INCH
THIRD ANGLE PROJECTION

		DATE
DRAWN BY	JJS	1988/04/13
CHECKED BY	RW	1988/04/13
APPROVED BY	RAS	1988/04/13

TITLE: PLUG AND RECEPTACLE 2 CIRCUIT HOUSINGS .062/(1.57) DIA.

molex MOLEX INCORPORATED

MATERIAL NO.: SEE CHART
DOCUMENT NO.: SD-1625-2*
SHEET NO.: 1 OF 3
SIZE: C

THIS DRAWING CONTAINS INFORMATION THAT IS PROPRIETARY TO MOLEX INCORPORATED AND SHOULD NOT BE USED WITHOUT WRITTEN PERMISSION

PLUG		
PART NO.	ENG. NO.	
03-06-7023	1625-2P1BK	
03-06-2023	1625-2P1	
03-06-7027	1625-2P2BK	OBSOLETE
03-06-2024	1625-2P2	

RECEPTACLE		
PART NO.	ENG. NO.	
03-06-6023	1625-2R1BK	
03-06-1020	1625-2R3	OBSOLETE
03-06-1023	1625-2R1	
03-06-1022	1625-2R2	
03-06-6025	1625-2R2RD	OBSOLETE
03-06-6026	1625-2R2GN	OBSOLETE
03-06-6027	1625-2R2BU	OBSOLETE
03-06-6022	1625-2R2BK	OBSOLETE
03-06-6028	1625-2R1BU	OBSOLETE

RECEPTACLE LEGEND:

1625-2R**

CIRCUIT SIZE

R = RECEPTACLE

BLANK = WITH STANDARD MOUNTING EARS; WITH DETENTS
1 = WITHOUT MOUNTING EARS; WITH DETENTS
2 = WITH PREBENT MOUNTING EARS; WITH DETENTS
3 = W/O MOUNTING EARS, WITH POSITIVE LOCK

BLANK = NATURAL

AM=AMBER	BK=BLACK	BU=BLUE
BN=BROWN	GY=GRAY	GN=GREEN
OR=ORANGE	RD=RED	YW=YELLOW

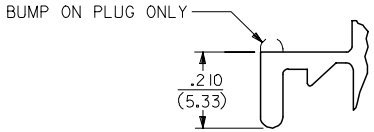

DETAIL 3

STANDARD MOUNTING EARS
(SCALE 4:1)

PLUG LEGEND:

1625-2P**

CIRCUIT SIZE

P = PLUG

1 = WITHOUT MOUNTING EARS
2 = WITH PREBENT MOUNTING EARS
3 = W/O MOUNTING EARS, WITH POSITIVE LOCK

BLANK = NATURAL

AM=AMBER	BK=BLACK	BU=BLUE
BN=BROWN	GY=GRAY	GN=GREEN
OR=ORANGE	RD=RED	YW=YELLOW

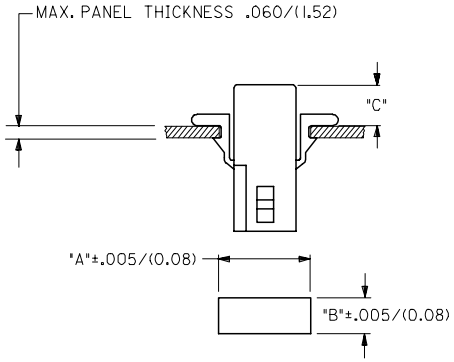

RECOMMENDED HOLE PATTERN

HOUSING	DIM. "A"	DIM. "B"	PREBENT EAR DIM. "C"	STD. EAR DIM. "C"
PLUG	.609 (15.47)	.318 (8.08)	.24 (6.0)	.24 (6.1)
RECEPTACLE	.505 (12.83)	.265 (6.73)	.25 (6.4)	.25 (6.4)

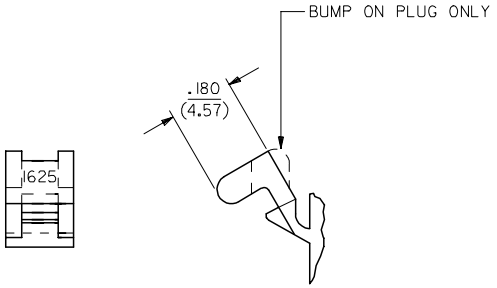

DETAIL 4

PREBENT MOUNTING EARS
(SCALE 4:1)

NOTES:
1. MATERIAL - NYLON TYPE 6/6, 94V-2
2. FINISH: NONE
3. PRODUCT SPECIFICATION: PS-02-06
4. PACKAGING SPECIFICATION: PK-1625-001
5. POSITIVE LOCK VERSION REQUIRES USE OF A SCREWDRIVER OR SIMILAR TOOL TO LIFT SHROUD ON PLUG HOUSING IN ORDER TO UNMATE RECEPTACLE HOUSINGS
6. HOUSINGS FOR USE WITH MOLEX .062/(1.57) DIA. SERIES TERMINALS.
7. CIRCUIT I.D. NUMBERS ON SIDE OF HOUSING APPEAR ON PARTS FROM TOOLS BUILT AFTER 07/01/1991.
8. THIS PART CONFORMS TO CLASS B REQUIRMENTS OF COSMETIC SPECIFICATION PS-45499-002.

UPDATE NOTES
EC NO: UCP2007-1980 2007/04/13
DRWN:PRIDDER 2007/04/16
CHKD:AELHAG 2007/04/19
APPR:FSMITH
DESCRIPTION
REV
AE1

QUALITY SYMBOLS
▼=0
(C)=0

GENERAL TOLERANCES (UNLESS SPECIFIED)	mm	INCH
4 PLACES	± ---	± ---
3 PLACES	± ---	± .007
2 PLACES	± 0.18	± .010
1 PLACE	± 0.25	± ---
ANGULAR ± 1 °		

DRAFT WHERE APPLICABLE MUST REMAIN WITHIN DIMENSIONS

DIMENSION STYLE: IN/MM
SCALE: 2:1
DESIGN UNITS: INCH
THIRD ANGLE PROJECTION

		DATE
DRAWN BY	JJS	1988/04/14
CHECKED BY	RW	1988/04/14
APPROVED BY	RAS	1988/04/14

TITLE: PLUG & RECEPTACLE 2 CIRCUIT HOUSINGS .062(1.57)DIA.

molex MOLEX INCORPORATED

MATERIAL NO.: SEE CHART
DOCUMENT NO.: SD-1625-2*
SHEET NO.: 3 OF 3
SIZE: C

THIS DRAWING CONTAINS INFORMATION THAT IS PROPRIETARY TO MOLEX INCORPORATED AND SHOULD NOT BE USED WITHOUT WRITTEN PERMISSION